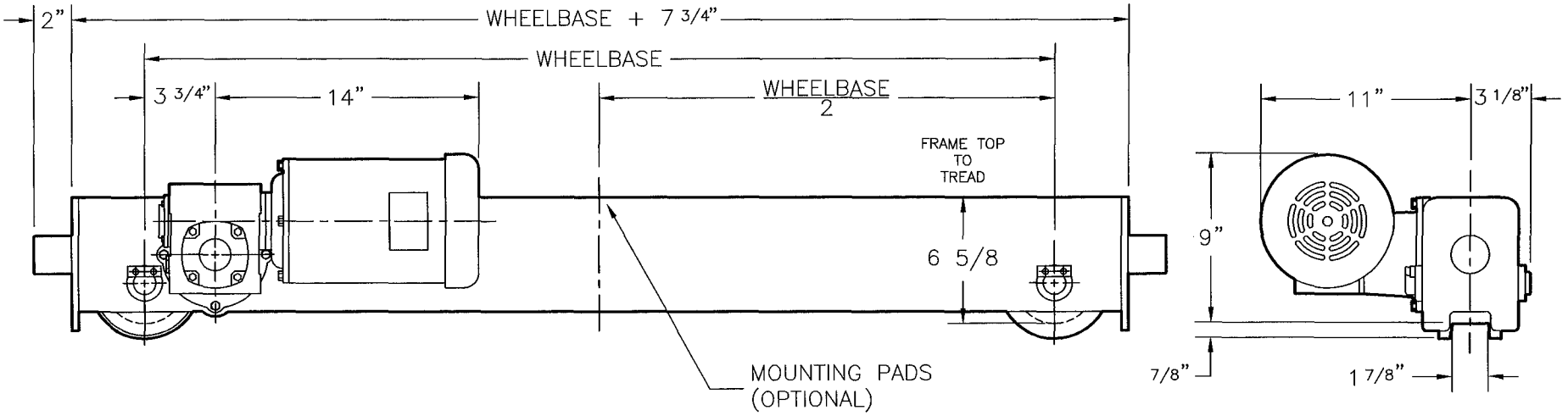

ALL DIMENSIONS ARE FOR REFERENCE ONLY AND SUBJECT TO CHANGE WITHOUT NOTICE

SATURN
OVERHEAD EQUIPMENT, LLC

1 to 2 TON TOP RUNNING MOTOR-DRIVEN END TRUCKS

CONTACT SATURN:
TEL: 1-800-631-4473
www.saturnoe.com

DRAWING NO.:
WB-7